Notes / Sketches / Maps

Dive Log

No. _____ Date: _____ Location: _____

Type of Dive: _____

Weather Conditions: _____ Temp: _____

Remarks:

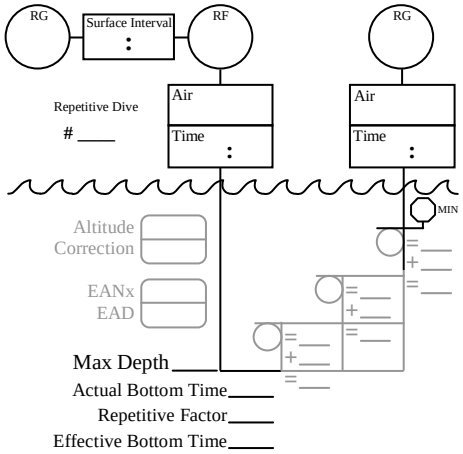

I/W Time:_____ U/W Time:_____

Current:_____ Surge:_____

H2O Temp:_____ At Depth:_____

Visibility:_____ At Depth:_____

Equipment Variations & Specialty Equipment

Wts: _____ Tanks: _____

____ x ____ x 33 ÷ (____ + 33) = ____ SACR

Air U/W Time Avg Depth psi/min/ata

Accumulated Bottom Time: ____ h ____ min

I learned…

Dive Buddy:_____

Phone #:_____

Email:_____

Signature: